PAGE	336

BY	CHK	REVISION RECORD MODIFICATIONS	DATE	REV.
ALLEN		RELEASE TO PRODUCTION	2007,9,5	1.0

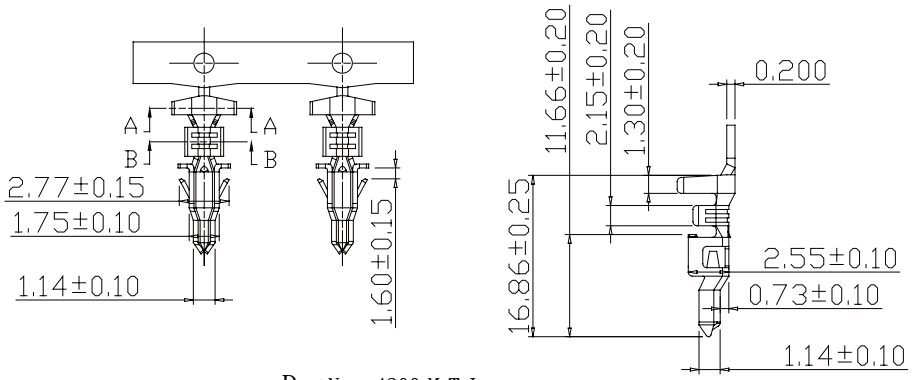

PartNo.:4200-M T-L

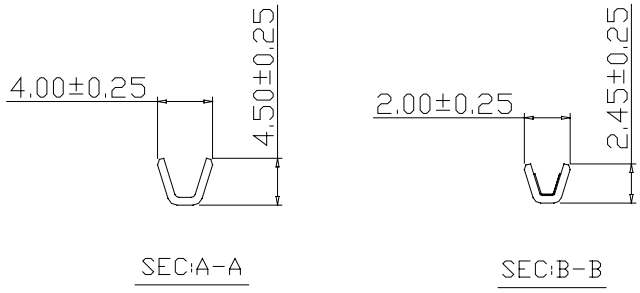

Wire Range	Insulation O.D	Material	Finish	Qty/reel
AWG#18-#24	3.10mm(max)	Brass	Tin-plated	5,000pcs

SPECIFICATIONS
Current Rating: 7A AC,DC
Voltage Rating: 600V AC,DC
Temperature Range: -25℃ ~ +85℃
Contact Resistance: 10mΩ Max
Insulation Resistance: 1000mΩ Min
Withstanding Voltage: 1500V AC/minute
Material: Nylon 66, UL94V-2
Color: Natural(Translucent)

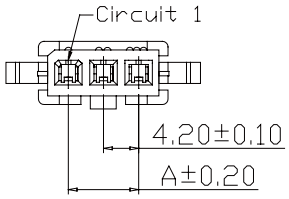

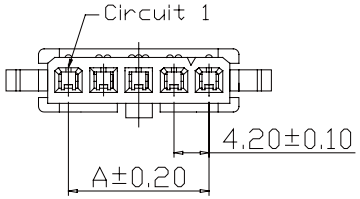

PART NO.	Dimensions	
	A	B
4200H-F102W-L	4.20	9.60
4200H-F103W-L	8.40	13.80
4200H-F104W-L	12.60	18.00
4200H-F105W-L	16.80	22.20

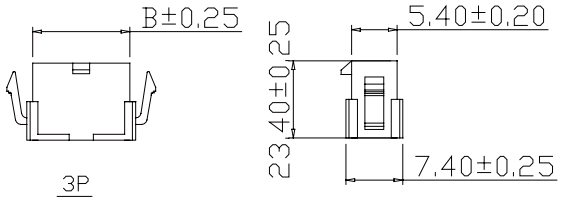

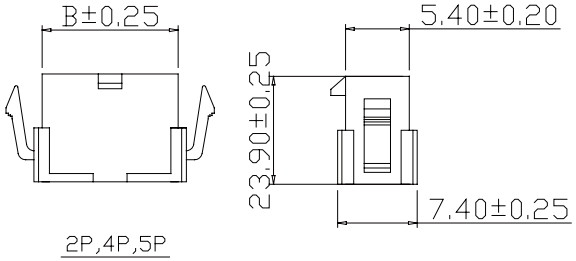

PartNo.:4200H-F1XXW-L

APPRO	CHECK	DRAWN	PART NO.	Part No.:4200H-F1XXW-L			DESCRIPTION
			ITEM NO.				
			DRAW NO.				
			UNIT	mm	SCALE	no	
			TOLER		NO.		

Tel: 0769 22020068 Fax: 0769 22020069 E-mail: sales@vigortec.com